Materials and specifications are subject to change without notice.
Featured machines in photos may include additional equipment.
See your XCMG dealer for available options.

www.xcmg.com

XCMG Regional Departments:

Europe	(+86-516) 87739703 87739218 87739537	Africa	(+86-516) 87735009 87739222 87739283
West Asia & North Africa	(+86-516) 87739702 87739202 87739223	Central Asia	(+86-516) 87739236 87739239 87739538
Asia-Pacific	(+86-516) 87739128 87739500 87739529	America	(+86-516) 87739285 87739551 87739710

XUZHOU CONSTRUCTION MACHINERY GROUP IMP. & EXP. CO., LTD
Add: No.1, Tuolanshan Road, Xuzhou Economic Developing Zone, Jiangsu, China 221004
Fax: (+86-516) 87739230
E-mail: export@xcmg.com

XE150U

Hydraulic Excavator

EPA Tier4

Advanced Configuration

Ecological and economical

- High-power engine is more fuel saving
- New Japan Kawasaki main pump can ensure high efficiency and reduced leakage
- Efficiency main valve increases overflow pressure and reduces pressure loss
- Smart matching technology ensures higher operating efficiency and lower fuel consumption,

Excellent after-sales service

- Global after-sales service system and quick response mechanism
- Real-time technical consultation and maintenance

Multiple application

- Variety of boom, stick and bucket matching to maximize utilization in different conditions;
- Multi-functional intelligent work tool control system can meet different operating requirements such as digging, breaking and dismantling
- Instantaneous pressurization function copes with complex working conditions.

Convenient maintenance

- Easy maintenance design concept makes your maintenance done without dead angle
- Maintenance-free air prefilter

Comfortable operating experience

- Air Conditioner and Heator with Double stage air filter ensure the appropriate temperature
- Silicone rubber shock absorber is adopted in the cab
- Air-suspending seat equipped with electric heating function
- Integrated control panel and large display screen provide multiple information
- ROPS and FOPS Cab can improve cab safety

Safe and durable

- Whole brazing technology improves lifespan
- Upgrade undercarriage structure to improve load bearing performance
- Strengthened key stress-bearing parts of chain links

Ecological And Economical

- Adopting a new generation of Cummins high-pressure common-rail EFI engine, tailored according to the excavator working conditions, features low speed, high torque, strong power, large power reserve, low fuel consumption and low noise.
- New Japan Kawasaki main pump is fully upgraded with large displacement, which is 7% higher than that of the previous generation. It can ensure high efficiency and reduced leakage under the same pressure. Swashplate swing angle increases power density greatly.
- Equipped with new generation of high efficiency main valve with the functions of confluence and regeneration, the overflow pressure is increased, the pressure loss is smaller, and the working ability is more outstanding.
- Smart matching technology, the machine can achieve higher operating efficiency and lower fuel consumption, and its fuel efficiency ratio is ahead of the same tonnage models. After continuous optimization and improvement of the hydraulic system, the control performance is further strengthened, maneuverability is more refined, and leveling and loading performance is better.

Comfortable And Safe

Comfortable

- Brand-new air conditioner and heater:Indoor and outdoor ambient temperature can be perceived through sensors and automatically adjusted to comfortable temperature. A good comfortable environment for operators can be provided with the cooperation of a multi-position adjustable air outlet.
- With new seat adjustment mode, the new air suspension seat based on ergonomics, can realize 7 kinds of postures including front and rear adjustments, high and low adjustments, backrest, headrest and handrails, it can also adjust the seat height automatically according to the operator's weight, which will greatly improve the comfort.
- The newly designed cab has a wide view, lower noise, and more user-friendly operation buttons to provide a more comfortable working environment.

Safe

- Optional ROPS and FOPS device and protective net can improve cab safety.
- The cab is structurally reinforced and the seat is equipped with safety belts.
- Middle-position startup function can avoid mis-operation; standard equipped rear video function which improves operation safety; the monitor which will give audible and visual alarm when fault occurs; running alarm function.
- Equipped with fire extinguisher, safety escape hammer and anti-skid device.

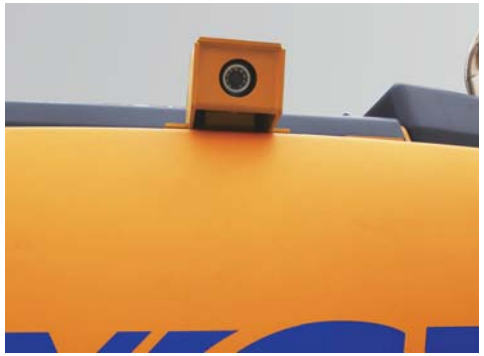

Reliable And Durable

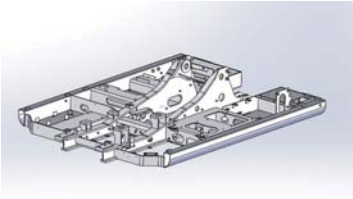

- Adopting whole brazing technology and new-type radiator welded by robots, and configuring positive pressure degassing type expansion tank, to improve the pump life, which can quickly remove the gas within engine and waterway, reduce the rust and meet 50℃ environmental operating requirements.
- The turntable adopts a rigid box structure to provide higher strength and improve the cab shock absorption ability. The engine mounting base structure is strengthened to improve shock absorption.
- With main body adopting I-beam rigid structure, the whole machine's strength is intensified, and the turntable side beam adopts the D-tube structure to improve its ability to resist external impact.
- The travelling mechanism adopts strengthened key parts of the chain rails bearing stress to improve the strength and impact resistance of the chain rails, and the service life of the track is greatly improved. With strengthened X-beam section, and the strength of the end face is greatly improved by increasing the size, thickness and structure of the box beam.
- The working equipment adopts the casting type single connecting rod to fully optimize the stress distribution, which greatly improves the reliability. The boom arm shaft seat adopts the forging-type shaft seat, and higher wear resistance can be achieved through the quenching and tempering treatment.
- Replace the XCMG new second generation bucket to make the force more reasonable and increase the durability.

Multiple application conditions

- The independently developed multi-functional intelligent work tool control system can be widely used for irrigation and water conservancy, river dredging, municipal construction and small mine construction. It can meet different operating requirements such as digging, breaking and dismantling, and its working condition adaptability is further strengthened.
- The design has the function of instantaneous pressurization. By means of the pressurization button on the handle, the rising speed of the boom or the traction force of walking can be increased instantaneously, so as to cope with complex working conditions.

- The new control system uses CAN bus, the monitor is responsible for display, the controller is responsible for signal acquisition and output, and the bus connects with monitor, GPS controller, engine ECM, which can achieve faster data management and more efficient control.

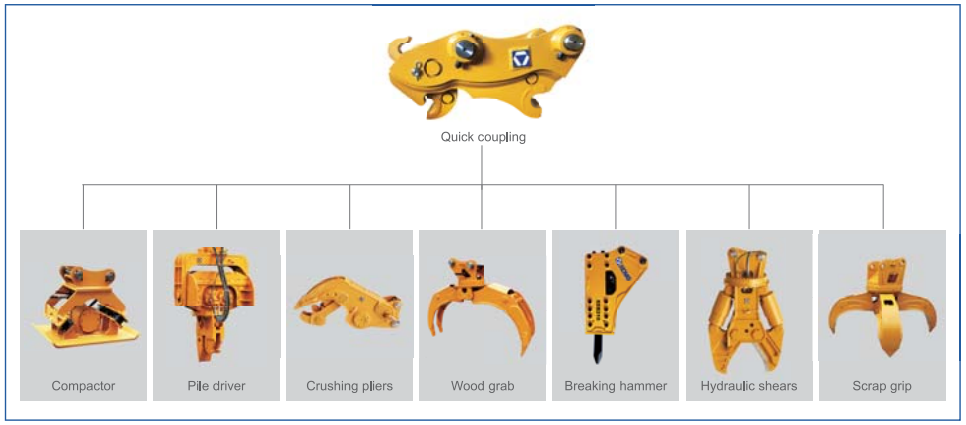

Maintenance And Service

- Daily maintenance points such as fuel pre-filter, fuel filter, oil filter, pilot filter, air filter and electrical box are accessible on the ground level, saving time and effort, and safer.
- The inverted visual fuel pre-filter can keep track of the filter element status, and can also discharge the gas in the pipeline to reduce the damage to the high-pressure fuel pump. The large-displacement manual pump is easier to operate and pump the oil much faster.
- The air conditioning system drying bottle is integrated on the condenser to reduce the leakage points of the refrigerant, and the disassembly is convenient and easy to replace.
- Fuel breather valve is standard equipped to keep the tank pressure stable, effectively filter dust, and ensure the oil quality.
- A wide range of after - sales service system and quick- response rescue mechanism can ensure that you use machine at ease.

XE150U is suitable for complex earth and rock working conditions. With Cummins powerful engine, which is energy-efficient and matched the best fuel economy adjustment, the efficiency of this engine can be greatly improved. The main valve of the main pump adopts imported original parts, which ensures the reliability and durability of the product. Structured design of the working device and chassis to make its strength withstand any test, and finally it is matched XCMG's latest XEICS intelligent control system and integrated cab, so that operators more comfortable, safer and labor-saving. This excavator is mainly used in road, municipal and other light urbanization open-air operations.

Standard Equipment

	Name of equipment	XE150U
Engine	Engine model	QSB4.5
	Emission level	Stage Ⅳ
	Automatic preheating	
	Oil-water separator with water level indication sensor	
	Radial seal air cleaner	
	Air prefilter	
	50°C high temperature ambient cooling assembly	
	Radiator dust screen	
	Fuel marker	
	Oil-water quick release device	
	Fuel breather valve	
	Air pressure difference indicator	
	Automatic idle speed	
Hydraulic system	Boom/arm flow regeneration	
	Auxiliary hydraulic valve	
	Reverse rotation damping valve	
	Automatic rotation parking brake	
	Hydraulic buffer valve	
	Straight hydraulic circuit	
	Boom priority valve	
	Rotary logic valve	
	Hydraulic oil ISO VG 46	
	Hydraulic pipeline: breaking hammer and thumb clamp	
	Operation mode switching	
	Rotary anti-sway valve	
	Spare valve plate	
	Gauge pressure monitoring	
Cab and interior trim	Pressurized cab	
	Seat belt (51 mm [2 "] wide)	
Cab and interior trim	Openable windscreen with auxiliary device	
	Front windshield divided by 70/30 ratio	
	Double laminated windshield and other toughened windows	
	Sliding door upper window	
	Bi-directional air outlet air conditioner with defroster (automatic type) (pressurization function)	
	Control handle	
	Travel control pedal with detachable manual control lever	
	Two stereo speakers	
	Beverage cup holder	
	Coat and hat hook	
	Cleanable floor mat	
	Air conditioning system	
	High and low gears shift	
	One-key boost mode	
	Top sunroof	
	Intermittent multi-gear wiper	
	Cup holder/envelope	
	Cold and warm storage box	
	Radio receiver	
Safety and security configuration	Driving door locks and cabin locks	
	Alarm horn	
	Isolation plate between engine and oil pump chamber	
	Engine Emergency Stop Switch	
	Rear window emergency exit	
	Battery circuit breaker	
	Boom and arm retaining valve	
	Explosion-proof valve for boom and arm pipeline	
	Overheat alarm	
	Safety handrails and pedals	
	Rotary alarm lamp	
	Anti-skid plate/anti-skid paste	
	Hydraulic safety locking lever	
	Emergency escape hammer	
	Roll over protection structure (ROPS)	
	Falling object protection structure (FOPS)	
Chassis system and shield	Track single rail protector	
	Bottom frame traction ring	
	600 mm (24 ") three-rib track shoe	
	Protective device kit: chassis bottom sealing plate, walking motor sealing plate	
Implement	Boom	
	Arm 2.964 m	
	Bucket 0.61M3 Strengthening Bucket	
Electrical system	Battery (2× 750CCA)	
	70A alternator	
	4.8 kW starter motor	
	Travel alarm	
	12V cigarette lighter	
	Camera	
	5V USB interface	
Lighting lamp	2.95 t counterweight	
Technology	XEICS intelligent control system	
	Data link socket	

Optional Equipment

	Name of equipment	XE150U
Engine	Oil-water separator with heater (24V)	
Hydraulic system	Hydraulic oil ISO VG 32, 68	
Cab and interior trim	Retractable seat belt (51 mm [2 "] wide)	
	Vehicle mounted oxygen supply device	
	Fire extinguisher	
	Reserve switch for working aids	
	Electric sunshade curtain	
Chassis system and shield	600 mm (24 ") three-rib track shoe	
	800 mm (31 ") three-rib track shoe	
	Track rubber block	
Implement	Arm 2.1/3.01 m	
	0.52m3 Strengthened bucket	
	0.3/0.4/0.7 m3 Earthwork bucket	
	Quick coupler	
Implement	Hydraulic breaker	
	Hydraulic thumb pliers	
	Vibratory plate compactor	
	Hydraulic shear	
	Grapples	
	High frequency crusher	
	Clamp shell bucket	
	Screening bucket	
	Pipe grab	
Electrical system	24V cigarette lighter	
	Front working light installed on cab top	
	Rear working light installed on cab top	
Lubrication system	Arm concentration	

Main Specifications

Item		unit		Main specifications	
Model		/	/	XE150U	XE150U
Operation weight		lb	Kg	32628	14800
Bucket capacity		yd3	m³	0.8	0.61
Engine	Model	/	/	Cummins QSB4.5	Cummins QSB4.5
	Electronic injection	/	/	√	√
	Four strokes	/	/	√	√
	Water cooling	/	/	√	√
	Turbocharging	/	/	√	√
	Air-to-air intercooler	/	/	√	√
	No.of cylinders	/	/	4	4
	Rated power	hp/rpm	kw/rpm	120.7/2200	90/2200
	Maximum torque/speed	lbf.ft/rpm	N.m/rpm	346.7/1500	470/1500
	Displacement	gal	L	1.2	4.5
Main performance	Travel speed	mph	km/h	3.3/2.0	5.3/3.2
	Swing speed	r/min	r/min	11.7	11.7
	Gradeability	°	°	≤35	≤35
	Ground pressure	psi	kPa	5.5	38
	Bucket digging force	lbf	kN	24032.2	106.9
	Arm digging force	lbf	kN	16501.1	73.4
	Maximum tractive force	lbf	kN	30124.5	134
Hydraulic system	Main pump	/	/	/	/
	Rated flow of main pump	gal/min	L/min	65.2574	2×123.5
	Main safety valve pressure	psi	MPa	4975/5366	34.3/37
	Travel system pressure	psi	MPa	4975	34.4
	Swing system pressure	psi	MPa	3626	25
	Pilot system pressure	psi	MPa	566	3.9

Item		unit		Main specifications	
Oil Capacity	Fuel tank capacity	gal	L	68.7	260
	Hydraulic tank capacity	gal	L	27.7	105
	Engine oil capacity	gal	L	2.9	11
Standard	Length of boom	ft/in	mm	15'1"	4600
	Length of arm	ft/in	mm	8'4"	2520
	Bucket capacity	yd3	m³	0.8	0.61

Dimensions

Item		Unit		Parameters	
Apperance size	A Overall length	ft/in	mm	25'7"	7806
	B Overall width	ft/in	mm	8'6"	2590
	C Overall height	ft/in	mm	9'6"	2900
	D Width of platform	ft/in	mm	8'2"	2490
	E Track length	ft/in	mm	12'1"	3658
	F Total Width of Chassis	ft/in	mm	8'6"	2590
	G Track shoe width	ft/in	mm	2'1"	600
	H Crawler base	ft/in	mm	9'6"	2910
	I Track Gauge	ft/in	mm	6'6"	1990
	J Counterweight Clearance	ft/in	mm	3'1"	942
	K Minimum Ground Clearance	ft/in	mm	1'7"	476
	L Minimum Tail Swing Radius	ft/in	mm	7'8"	2355
	M Track Height	ft/in	mm	2'8"	836

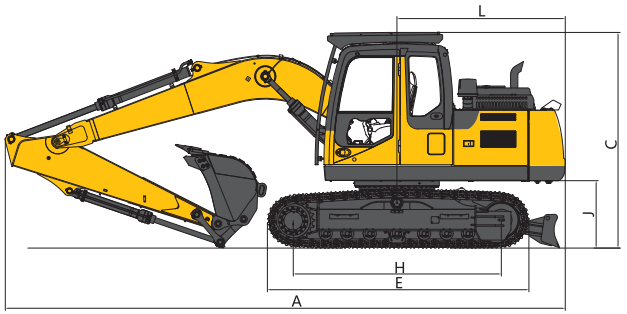

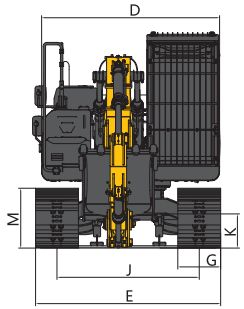

Working Range

	Item	Unit		Parameters	
Working scope	A Max. digging height	ft/in	mm	28'4"	8640
	B Max. dumping height	ft/in	mm	20'4"	6180
	C Max. digging depth	ft/in	mm	18'1"	5520
	D Maximum depth cut for 2240mm(8 ft) level bottom	ft/in	mm	17'6"	5324
	E Maximum vertical wall digging depth	ft/in	mm	15'5"	4697
	F Max. digging radius	ft/in	mm	27'2"	8304
	G Min. swing radius	ft/in	mm	8'1"	2445

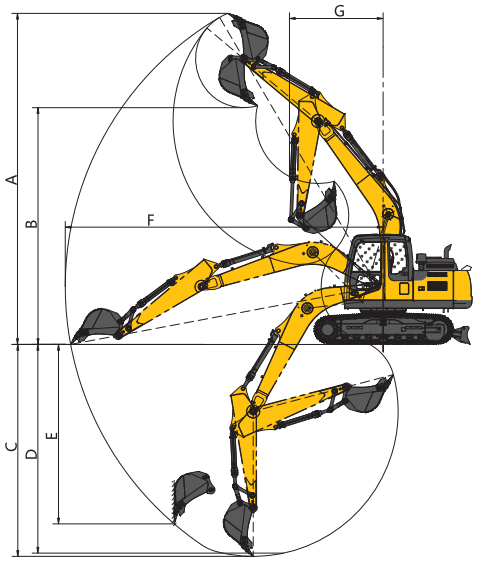

Lifting Capacity

Lifting point height (m)	Rated lift capacity – Straight ahead (back) (kg)					Rated lift capacity – over-side (kg)				
	Lifting point radius (m)				Lifting capacity at maximum radius	Lifting point radius (m)				Lifting capacity at maximum radius
	1.5	3	4.5	6		1.5	3	4.5	6	
6			*3242		*2593			*3242		*2593
4.5			*3438	*3371	*2404			*3438	2593	2357
3		*5662	*4186	*3592	*2398		*5662	3869	2523	2040
1.5		*8117	*5097	3738	*2531		6427	3623	2421	1925
Ground		*7128	5569	3647	*2832		6123	3448	2338	1948
-1.5	*4953	*8647	5496	3618	3353	*4953	6092	3384	2312	2155
-3	*9054	*7392	*5015		*3886	*9054	6195	3429		2734

Capacities marked with an asterisk(*) are limited by hydraulic capacities.